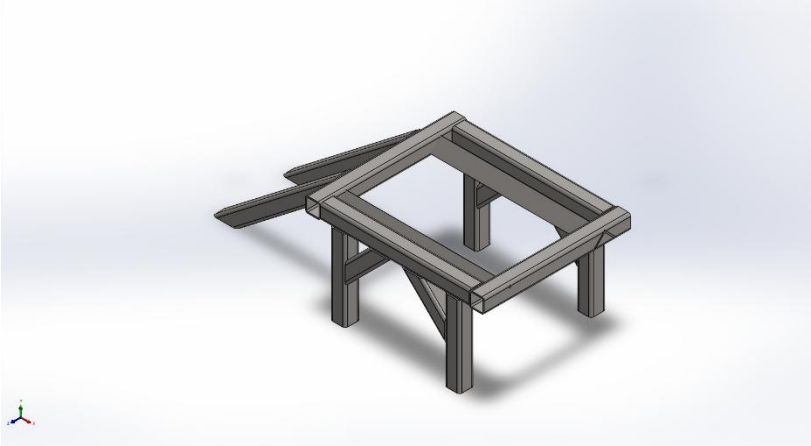

Simulation of Welding bracket

Date: April 21, 2026
Designer: Solidworks
Study name: Radom vibration
Analysis type: Linear dynamic analysis (Random Vibration)

Table of Contents

Description 1
Assumptions 2
Model Information 3
Study Properties 7
Units 8
Material Properties 9
Loads and Fixtures 10
Connector Definitions 10
Interaction Information 11
Mesh information 12
Sensor Details 13
Study Results 14
Conclusion 17

Description

No Data

Assumptions

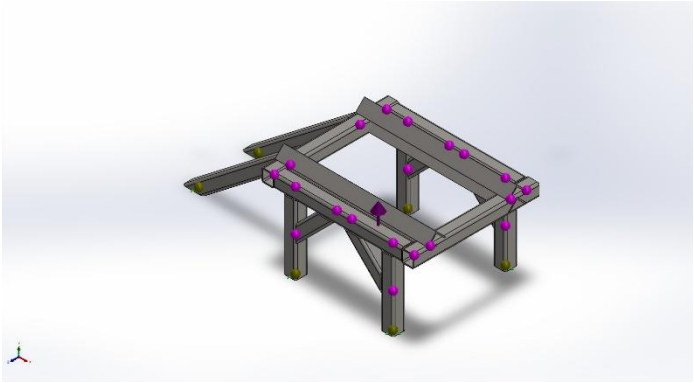

Original Model

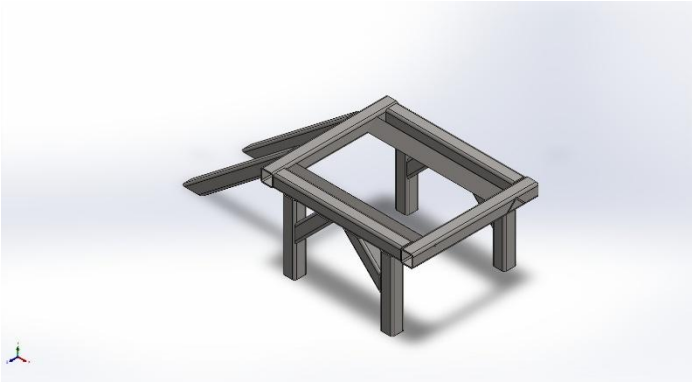

Model Analyzed

Model Information

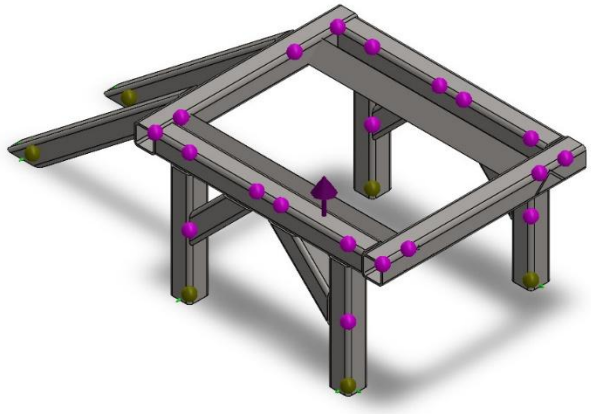

Model name: Welding bracket
Current Configuration: Default

Beam Bodies:

Document Name and Reference	Formulation	Properties	Document Path/Date Modified
SolidBody 1(Imported16) 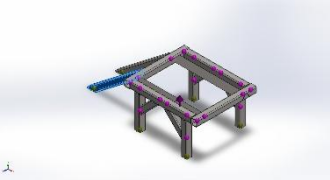	Beam - Uniform C/S	**Section Standard-Custom** **Section Area:** **0.00167035m^2** **Length:722.617mm** **Volume:0.00120702m^3** **Mass Density:7,900kg/m^3** **Mass:9.53545kg** **Weight:93.4474N**	**C:\Users\26869\Desktop\game\Solidwork\resource\model\47、48\Welding bracket.SLDPRT**
SolidBody 3(Imported2) 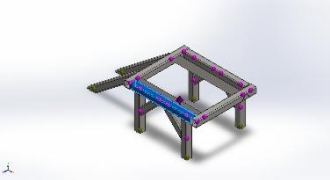	Beam - Uniform C/S	**Section Standard-Custom** **Section Area:** **0.00167035m^2** **Length:762mm** **Volume:0.00127281m^3** **Mass Density:7,900kg/m^3** **Mass:10.0552kg** **Weight:98.5407N**	**C:\Users\26869\Desktop\game\Solidwork\resource\model\47、48\Welding bracket.SLDPRT**
SolidBody 4(Imported11) 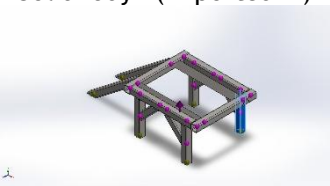	Beam - Uniform C/S	**Section Standard-Custom** **Section Area:** **0.00167035m^2** **Length:412.75mm** **Volume:0.000689437m^3** **Mass Density:7,900kg/m^3** **Mass:5.44655kg** **Weight:53.3762N**	**C:\Users\26869\Desktop\game\Solidwork\resource\model\47、48\Welding bracket.SLDPRT**
SolidBody 5(Imported18)	Beam - Uniform C/S	**Section Standard-Custom**	**C:\Users\26869\Desktop\game\Solidwork\resource**

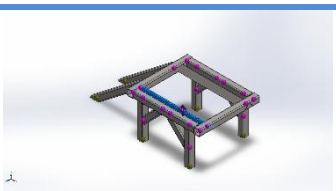		Section Area: 0.000923659m^2 Length:914.4mm Volume:0.000844594m^3 Mass Density:7,900kg/m^3 Mass:6.67229kg Weight:65.3885N	model\47、48\Welding bracket.SLDPRT
SolidBody 6(Imported17) 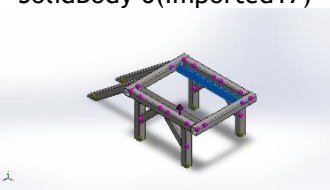	Beam - Uniform C/S	Section Standard-Custom Section Area: 0.000923659m^2 Length:914.4mm Volume:0.000844594m^3 Mass Density:7,900kg/m^3 Mass:6.67229kg Weight:65.3885N	C:\Users\26869\Desktop\game\Solidwork\resource\model\47、48\Welding bracket.SLDPRT
SolidBody 7(Imported3) 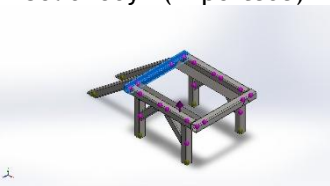	Beam - Uniform C/S	Section Standard-Custom Section Area: 0.00167035m^2 Length:749.3mm Volume:0.00125159m^3 Mass Density:7,900kg/m^3 Mass:9.88759kg Weight:96.8984N	C:\Users\26869\Desktop\game\Solidwork\resource\model\47、48\Welding bracket.SLDPRT
SolidBody 8(Imported12) 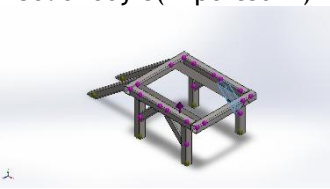	Beam - Uniform C/S	Section Standard-Custom Section Area: 0.00167035m^2 Length:242.467mm Volume:0.000405008m^3 Mass Density:7,900kg/m^3 Mass:3.19956kg Weight:31.3557N	C:\Users\26869\Desktop\game\Solidwork\resource\model\47、48\Welding bracket.SLDPRT
SolidBody 9(Imported4) 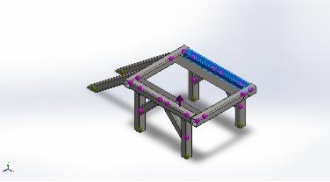	Beam - Uniform C/S	Section Standard-Custom Section Area: 0.00167035m^2 Length:762mm Volume:0.00127281m^3 Mass Density:7,900kg/m^3 Mass:10.0552kg Weight:98.5407N	C:\Users\26869\Desktop\game\Solidwork\resource\model\47、48\Welding bracket.SLDPRT
SolidBody 10(Imported13) 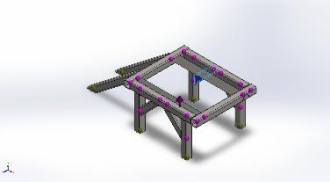	Beam - Uniform C/S	Section Standard-Custom Section Area: 0.00167035m^2 Length:242.467mm Volume:0.000405008m^3 Mass Density:7,900kg/m^3 Mass:3.19956kg Weight:31.3557N	C:\Users\26869\Desktop\game\Solidwork\resource\model\47、48\Welding bracket.SLDPRT

SolidBody 11(Imported5) 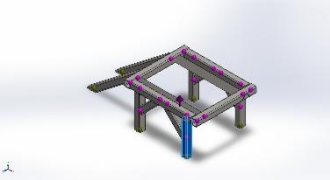	Beam - Uniform C/S	**Section Standard-Custom Section Area: 0.00167035m^2 Length:412.75mm Volume:0.000689437m^3 Mass Density:7,900kg/m^3 Mass:5.44655kg Weight:53.3762N**	**C:\Users\26869\Desktop\game\Solidwork\resource\model\47、48\Welding bracket.SLDPRT**
SolidBody 12(Imported14) 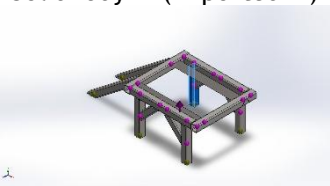	Beam - Uniform C/S	**Section Standard-Custom Section Area: 0.00167035m^2 Length:412.75mm Volume:0.000689437m^3 Mass Density:7,900kg/m^3 Mass:5.44655kg Weight:53.3762N**	**C:\Users\26869\Desktop\game\Solidwork\resource\model\47、48\Welding bracket.SLDPRT**
SolidBody 13(Imported1) 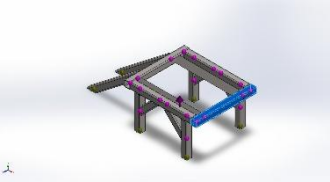	Beam - Uniform C/S	**Section Standard-Custom Section Area: 0.00167035m^2 Length:749.3mm Volume:0.00125159m^3 Mass Density:7,900kg/m^3 Mass:9.88759kg Weight:96.8984N**	**C:\Users\26869\Desktop\game\Solidwork\resource\model\47、48\Welding bracket.SLDPRT**
SolidBody 14(Imported15) 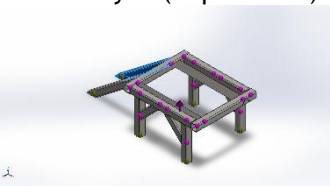	Beam - Uniform C/S	**Section Standard-Custom Section Area: 0.00167035m^2 Length:722.617mm Volume:0.00120702m^3 Mass Density:7,900kg/m^3 Mass:9.53545kg Weight:93.4474N**	**C:\Users\26869\Desktop\game\Solidwork\resource\model\47、48\Welding bracket.SLDPRT**
SolidBody 15(Imported6) 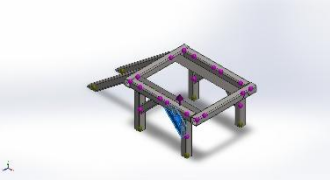	Beam - Uniform C/S	**Section Standard-Custom Section Area: 0.00167035m^2 Length:242.467mm Volume:0.000405008m^3 Mass Density:7,900kg/m^3 Mass:3.19956kg Weight:31.3557N**	**C:\Users\26869\Desktop\game\Solidwork\resource\model\47、48\Welding bracket.SLDPRT**
SolidBody 16(Imported9) 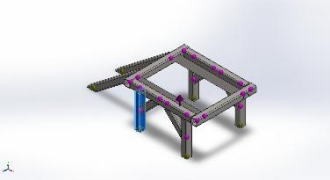	Beam - Uniform C/S	**Section Standard-Custom Section Area: 0.00167035m^2 Length:412.75mm Volume:0.000689437m^3 Mass Density:7,900kg/m^3 Mass:5.44655kg Weight:53.3762N**	**C:\Users\26869\Desktop\game\Solidwork\resource\model\47、48\Welding bracket.SLDPRT**

SolidBody 17(Imported10) 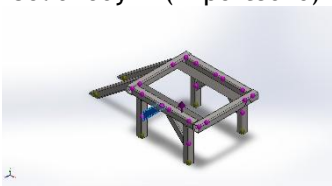	Beam - Uniform C/S	**Section Standard-Custom Section Area: 0.00167035m^2 Length:242.467mm Volume:0.000405008m^3 Mass Density:7,900kg/m^3 Mass:3.19956kg Weight:31.3557N**	**C:\Users\26869\Desktop\game\Solidwork\resource\model\47、48\Welding bracket.SLDPRT**

Study Properties

Study name	Radom vibration
Analysis type	Linear dynamic analysis (Random Vibration)
Mesh type	Beam Mesh
Number of frequencies	45
Decouple the mixed free body modes	Off
Solver type	FFEPlus
Soft Spring:	Off
Incompatible bonding options	Automatic
Thermal option	Include temperature loads
Zero strain temperature	298 Kelvin
Include fluid pressure effects from SOLIDWORKS Flow Simulation	Off
Lower frequency limit	20 Hz
Upper frequency limit	2,000 Hz
Number of output frequencies	10
Correlation	Fully correlated
Result folder	SOLIDWORKS document (C:\Users\26869\Desktop\game\Solidwork\resource\model\47、48)

Units

Unit system:	SI (MKS)
Length/Displacement	mm
Temperature	Kelvin
Angular velocity	Rad/sec
Pressure/Stress	N/m^2

Material Properties

Model Reference	Properties	Components
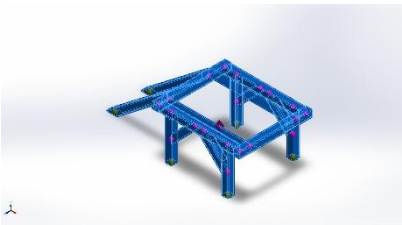	**Name:** AISI 1020 **Model type:** Linear Elastic Isotropic **Default failure criterion:** Max von Mises Stress **Yield strength:** 3.51571e+08 N/m^2 **Tensile strength:** 4.20507e+08 N/m^2 **Elastic modulus:** 2e+11 N/m^2 **Poisson's ratio:** 0.29 **Mass density:** 7,900 kg/m^3 **Shear modulus:** 7.7e+10 N/m^2 **Thermal expansion coefficient:** 1.5e-05 /Kelvin	SolidBody 1(Imported16)(Welding bracket), SolidBody 3(Imported2)(Welding bracket), SolidBody 4(Imported11)(Welding bracket), SolidBody 5(Imported18)(Welding bracket), SolidBody 6(Imported17)(Welding bracket), SolidBody 7(Imported3)(Welding bracket), SolidBody 8(Imported12)(Welding bracket), SolidBody 9(Imported4)(Welding bracket), SolidBody 10(Imported13)(Welding bracket), SolidBody 11(Imported5)(Welding bracket), SolidBody 12(Imported14)(Welding bracket), SolidBody 13(Imported1)(Welding bracket), SolidBody 14(Imported15)(Welding bracket), SolidBody 15(Imported6)(Welding bracket), SolidBody 16(Imported9)(Welding bracket), SolidBody 17(Imported10)(Welding bracket)
Curve Data:N/A		

Loads and Fixtures

Fixture name	Fixture Image	Fixture Details
Fixed-1	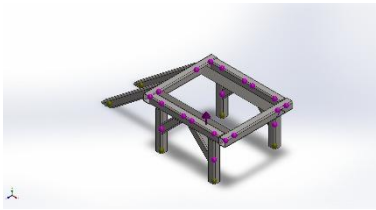	**Entities:** 6 Joint(s) **Type:** Fixed Geometry

Load name	Load Image	Load Details	Function Curve
Base Excitation-1	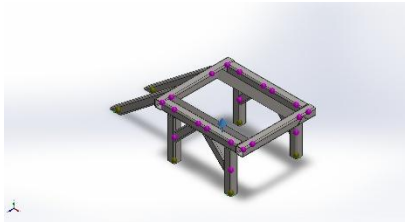	**Type:** Acceleration **Translation:** ---, 1, --- **Units:** in, rad **Phase Angle:** 0 **Units:** deg	Frequency curve

Connector Definitions

No Data

Interaction Information

Interaction	Interaction Image	Interaction Properties
Global Interaction	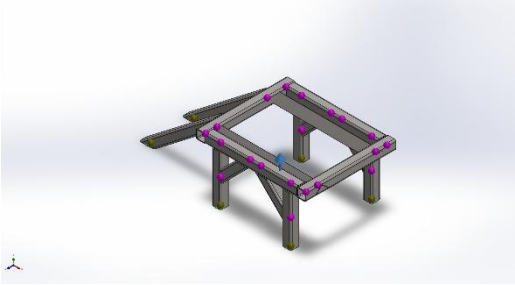	**Type:** Bonded **Components:** 1 component(s) **Options:** Independent mesh

Mesh information

Mesh type	Beam Mesh

Mesh information - Details

Total Nodes	558
Total Elements	548
Time to complete mesh(hh;mm;ss):	00:00:02
Computer name:	REMY

Mesh Control Information:

Mesh Control Name	Mesh Control Image	Mesh Control Details
Control-2	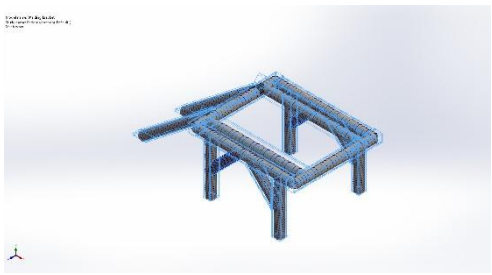	**Entities:** 2 Solid Body (s), 16 Beam (s) **Number of Elements:** 30

Mesh Quality Plots

Name	Type	Min	Max
Quality1	Mesh	-	-

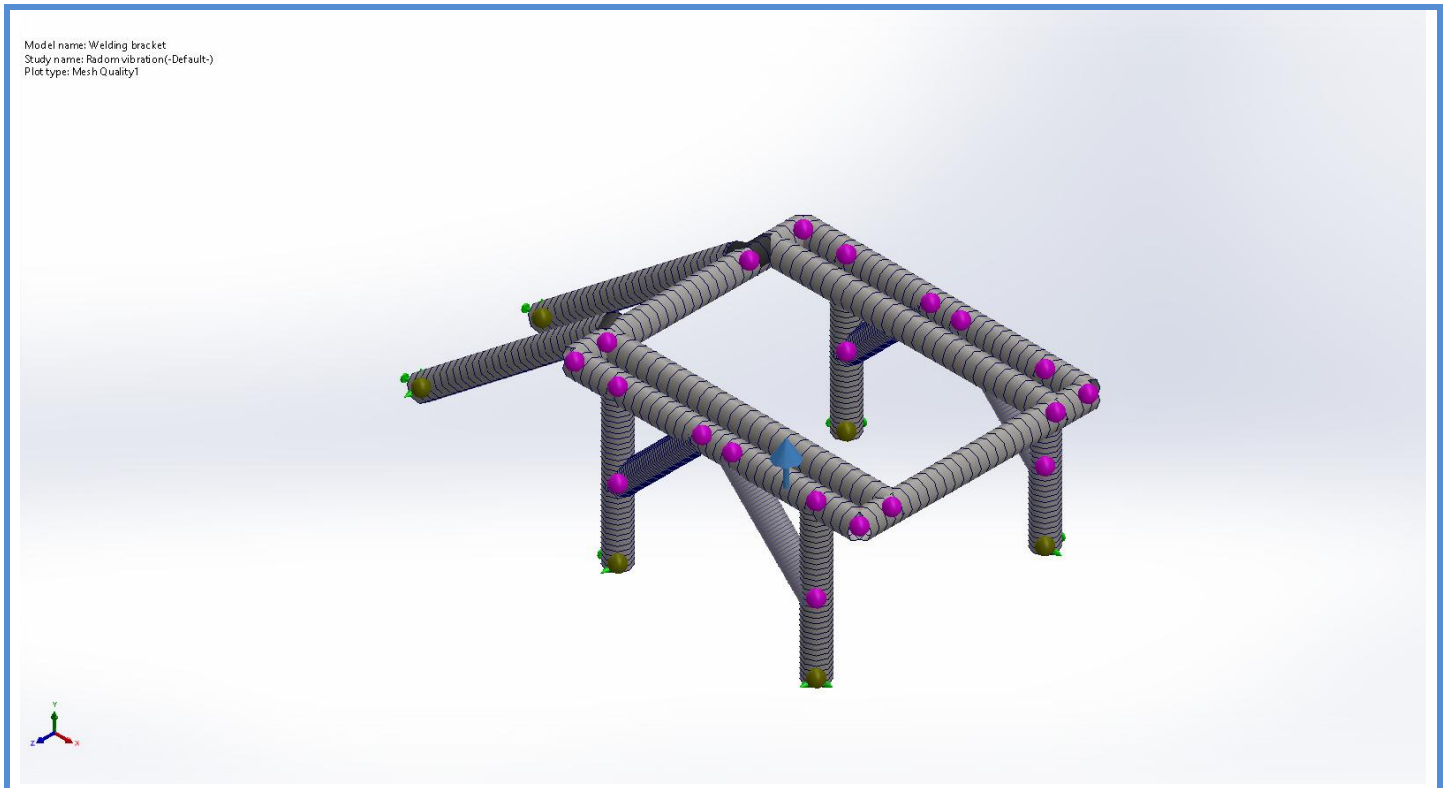

Welding bracket-Radom vibration-Quality-Quality1

Sensor Details

No Data

Study Results

Name	Type	Min	Max
Stress1	Upper bound axial and bending	0.000e+00N/m^2 Element: 543	7.032e+07N/m^2 Element: 126

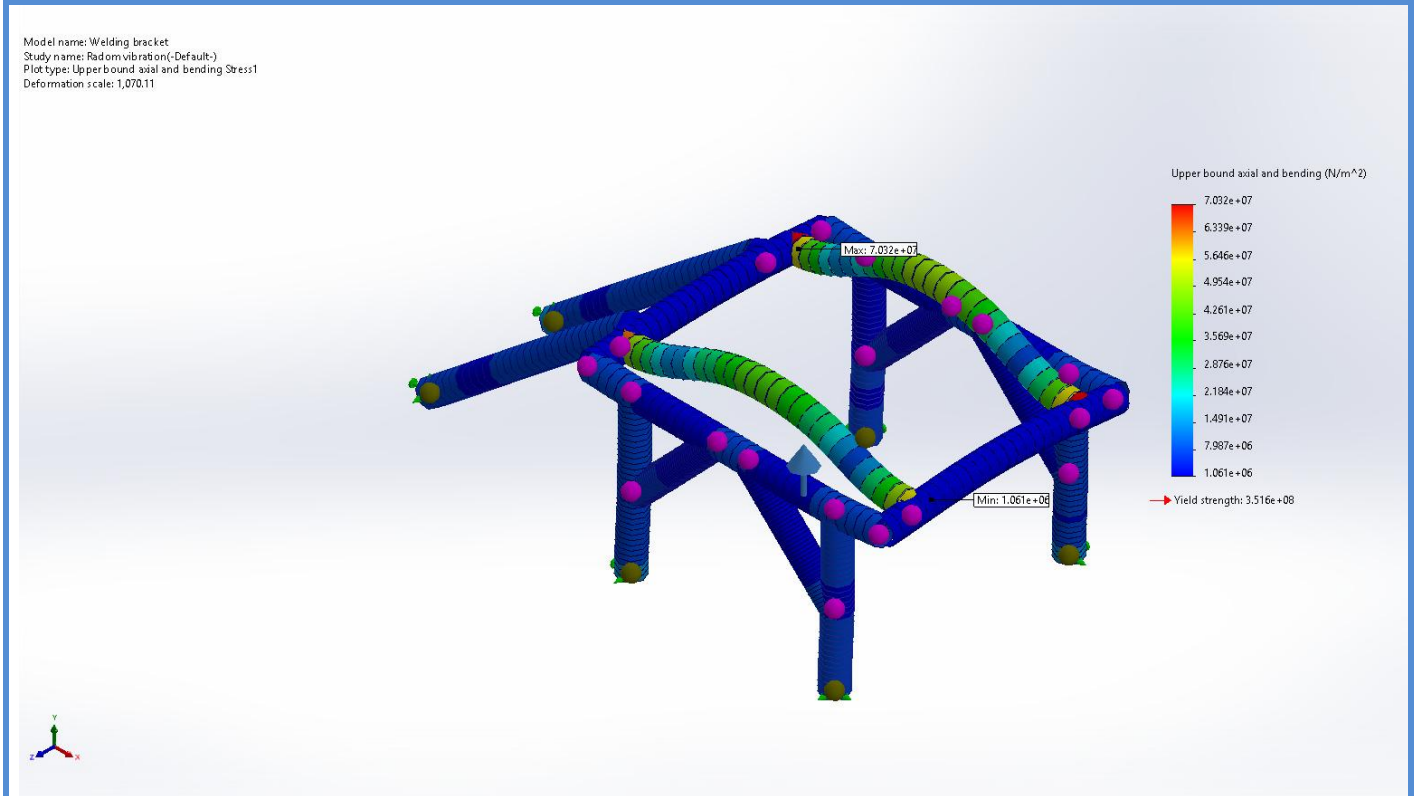

Welding bracket-Radom vibration-Stress-Stress1

Name	Type	Min	Max
Displacement1	URES: Resultant Displacement	0.000e+00mm Node: 1	1.408e-01mm Node: 144

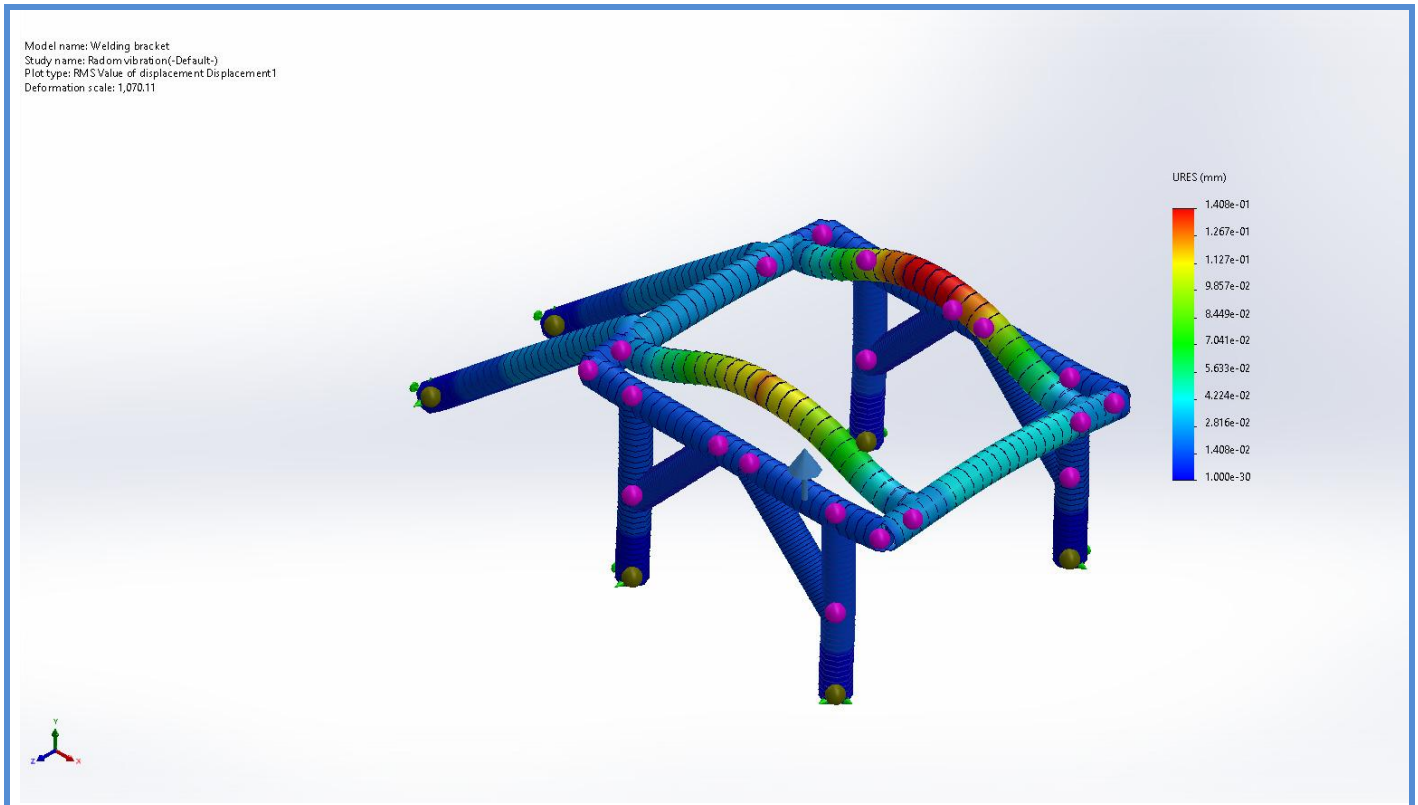

Welding bracket-Radom vibration-Displacement-Displacement1

Mass Participation (Normalized)

Mode Number	Frequency(Hertz)	X direction	Y direction	Z direction
1	153.72	1.8104e-07	5.3841e-07	0.50113
2	171.12	1.2059e-07	4.7025e-05	5.0583e-06
3	192.94	6.2857e-07	4.099e-08	0.30502
4	269.49	1.6926e-05	3.0144e-05	0.0071471
5	323.6	0.034079	0.13409	5.6757e-06
6	343.46	0.0012997	0.00027972	0.00029504
7	343.85	0.00034848	0.00072863	0.00051893
8	356.43	4.9241e-05	1.1787e-06	0.00084629
9	384.96	0.5687	0.036466	7.8145e-09
10	441.06	9.3752e-05	0.001858	1.2516e-05
11	488.12	8.2877e-06	0.00073377	0.0015978
12	502.79	0.0035843	0.056957	7.3475e-06
13	514.43	2.3214e-06	2.5427e-06	0.00017192
14	516.5	1.1108e-05	0.0083306	1.1168e-06

15	595.8	0.0018341	0.0014802	0.00019853
16	618.76	0.1144	0.083357	6.3923e-05
17	683.54	0.00014838	0.00019417	0.0016948
18	686.24	0.00033829	2.7086e-05	1.9243e-05
19	689.08	2.6532e-05	1.7872e-05	3.4945e-05
20	768.86	0.055114	0.0091526	0.00070396
21	779.06	0.058194	0.0084697	2.7739e-05
22	821.78	0.00084937	0.0001551	1.8299e-05
23	835.5	0.0019319	0.00038681	0.010088
24	855.28	0.00045044	0.00020296	1.1296e-06
25	856.28	9.3726e-05	2.1198e-05	0.0017927
26	880.91	0.00037069	4.9162e-05	0.0029389
27	953.3	0.00040098	0.00041372	0.00010368
28	1,019.3	0.0014115	0.0039775	0.0027025
29	1,020.7	2.5476e-05	9.1917e-05	0.00096388
30	1,021.9	0.00020243	0.00055151	0.0024285
31	1,032	0.0066568	0.027684	2.1669e-05
32	1,045.3	0.0031159	0.0018899	0.00066256
33	1,119.7	0.0010094	0.16267	7.3831e-05
34	1,142.3	0.0003872	0.067867	0.0001139
35	1,182.4	7.7605e-05	0.0013332	2.1413e-06
36	1,185.3	2.8391e-06	5.719e-10	7.6911e-06
37	1,225.3	1.5447e-06	0.0046413	0.0024551
38	1,266.5	6.7446e-06	0.002337	5.1871e-05
39	1,286.9	6.6319e-05	0.01289	0.0027889
40	1,330.5	0.00032873	0.040072	0.00065374
41	1,342.5	2.8483e-05	0.0012892	2.4467e-06
42	1,345.8	0.00034251	0.02	0.00049698
43	1,389.6	0.022615	0.12426	2.7791e-08
44	1,477	0.0054874	0.009242	0.0017903
45	1,494.3	7.2887e-05	0.00096966	0.019275

		Sum X = 0.88418	Sum Y = 0.82521	Sum Z = 0.86893

Conclusion